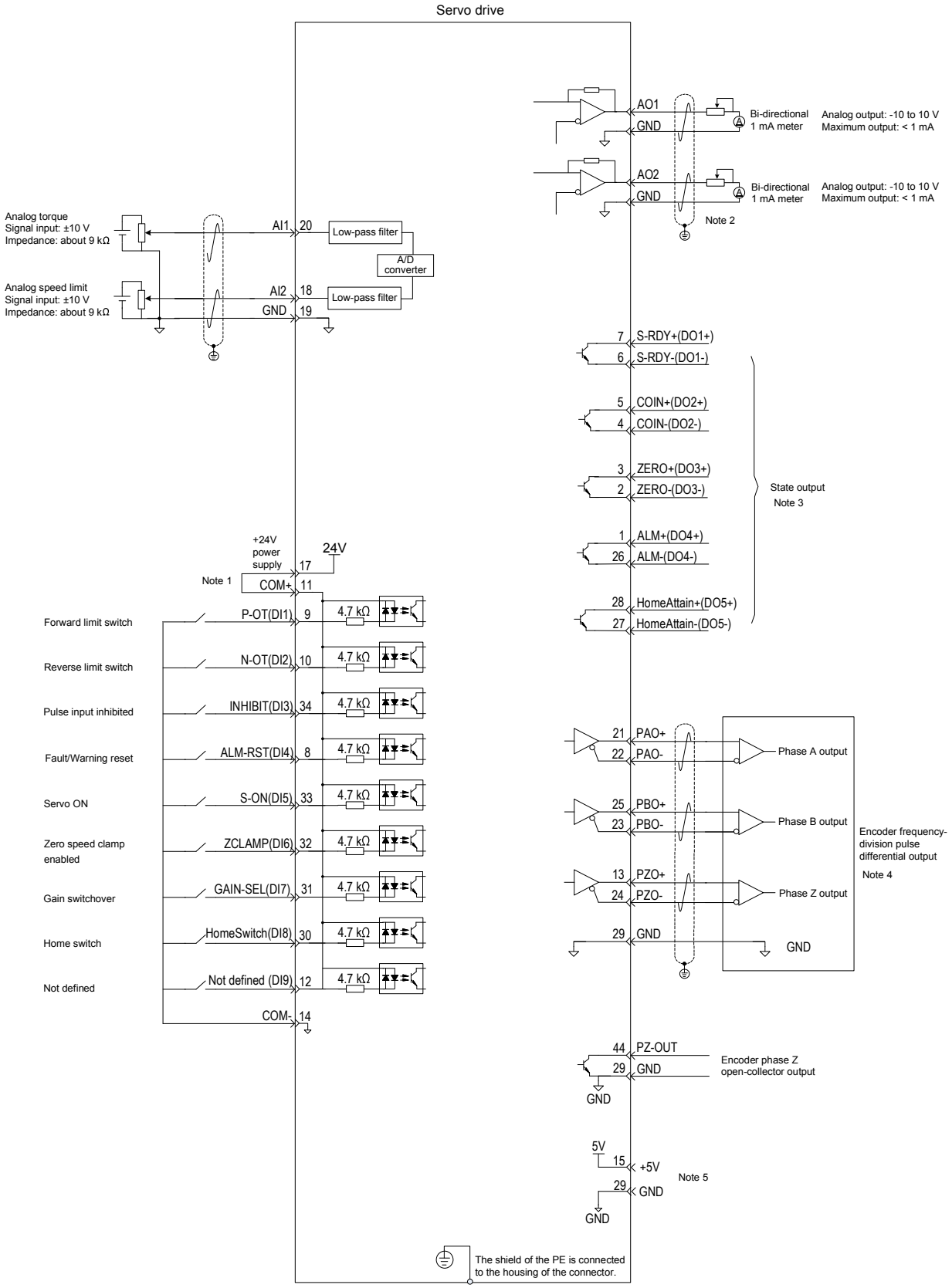Figure 3-38 Wiring of the torque control mode